This information is provided from TechnologyOne ECM

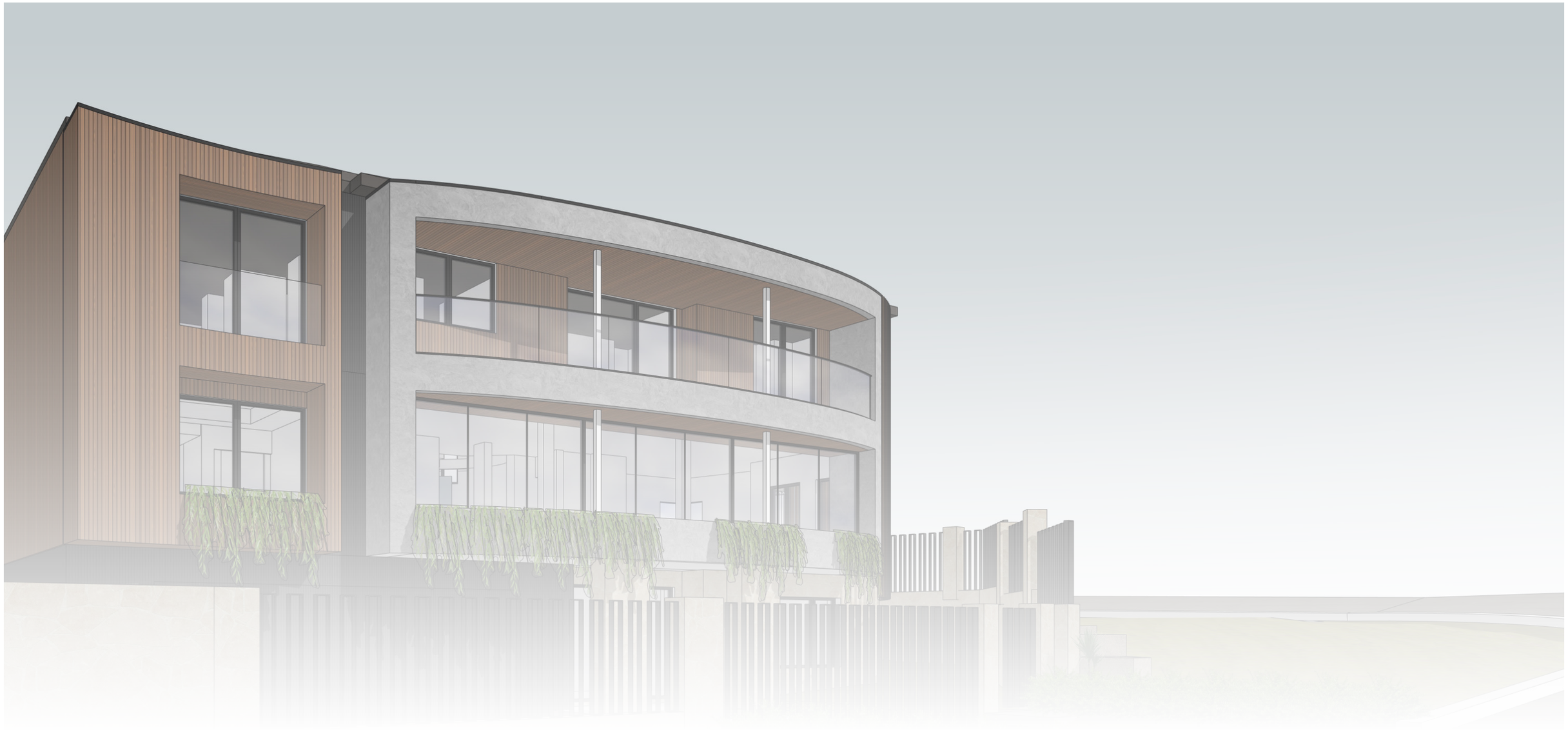

ADVERTISING COPY ONLY
These plans are for advertising of this development application only. These plans are subject to change and may not reflect the final issued as part of the final decision of the application. These plans are not to be reproduced, copied, shared or distributed without the consent of the applicant of this development application.

Document Set ID: 7895098
Version: 1, Version Date: 09/09/2026

Print Date: 11 September 2026, 10:58 am

This information is provided from TechnologyOne ECM

ADVERTISING COPY ONLY
These plans are for advertising of this development application only. These plans are subject to change and may not reflect the final issued as part of the final decision of the application. These plans are not to be reproduced, copied, shared or distributed without the consent of the applicant of this development application.

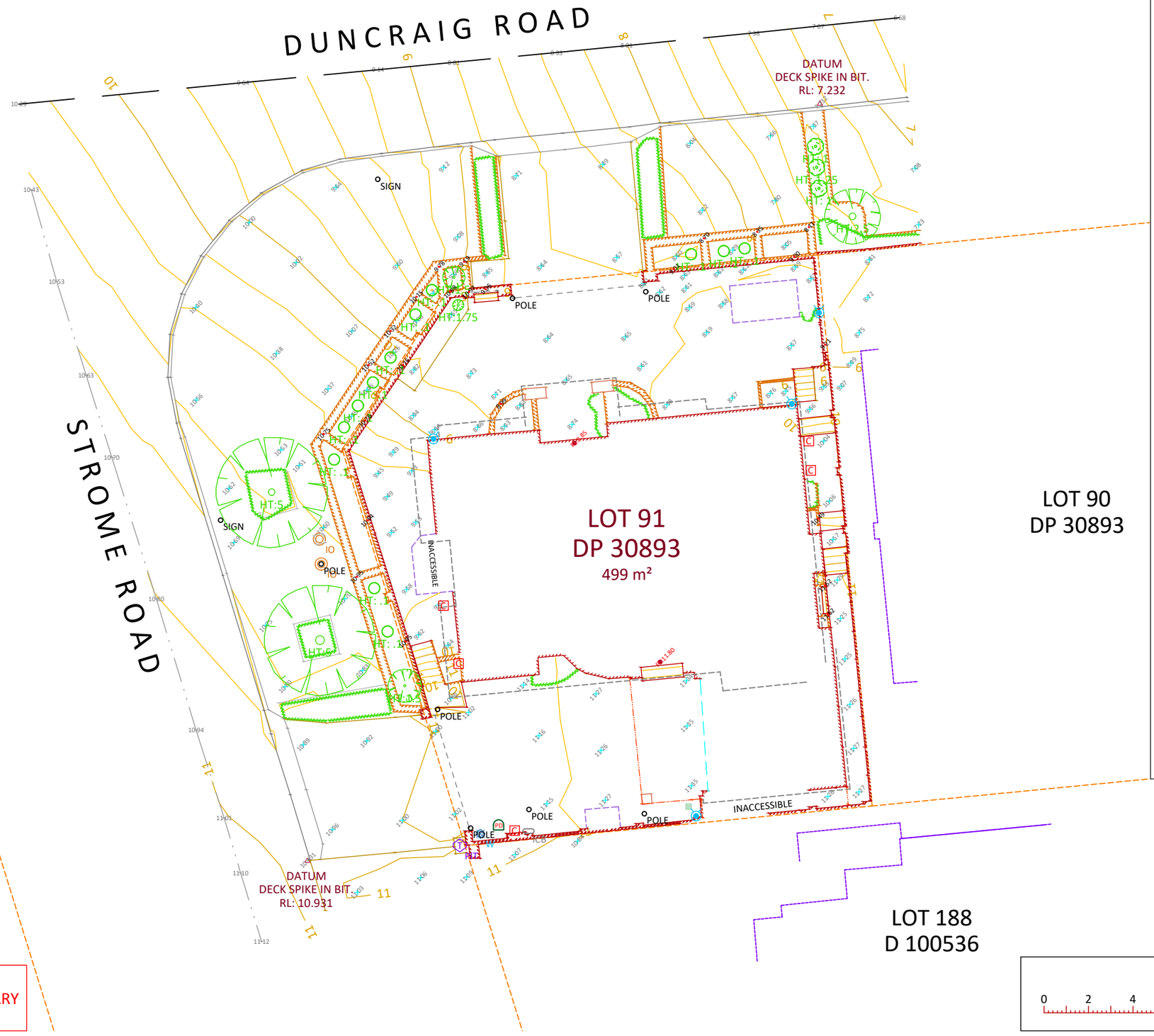

LEGEND

- Temporary Bench Mark
- Spot Height
- Tree
- Stump
- Bush
- Inspection Opening
- Pole
- Elec. Cable Box
- Irrigation Control Box
- Cable Dome
- Water Meter
- Drain
- Floor Level
- Tap
- Telecom Pit
- Sign - One Pole
- Edge of Concrete
- Bush Line
- Edge of Paving
- Shed
- Building Outline
- Wall
- Concrete Column
- Gate
- Building
- Garage Door
- Stairs/Steps
- Retaining Wall
- Road Centreline
- Kerb Bottom
- Kerb Top
- Line Marking Dashed
- Awning
- Gutter Line
- Approx. Landgate SCDB Boundary
- Major Contour (1m Interval)
- Minor Contour (0.2m Interval)

NOTE:
AHD LEVEL DERIVED FROM STANDARD SURVEY MARK [APPLECROSS 52]

NOTE: BOUNDARY LINES AND POSITION HAVE BEEN TAKEN FROM LANDGATE'S SCDB DATABASE.

WARNING: BOUNDARY RE-ESTABLISHMENT REQUIRED TO CONFIRM BOUNDARY POSITION AND DIMENSIONS

1:200
0 2 4 6 8 10 12 14 16
ALL DISTANCES IN METRES

CK Maloney Surveying
Land Development Surveying
ABN 28 614 679 828 ACN 614 679 828
Engineering, Construction and Civil Surveying, Feature Surveys, Boundary Re-Establishments, Subdivisions, Aerial Surveying and Photography.
Phone: 1300 00 2567
Email: info@ckindustries.com.au
Website: www.ckindustries.com.au
Office: Unit 3, 44 Rigali Way, Wangara WA 6065
Mail: P.O.Box 14 Wanneroo WA 6946

Positional Uncertainty
± 0.03m Horizontal
± 0.03m Vertical

PAPER SIZE A3

© This drawing is copyright. The use or copying of this drawing in whole, or in part, without the written permission of CK Maloney Surveying Pty LTD constitutes a copyright infringement.

CKMS

FEATURE AND CONTOUR SURVEY
LOT 91 (#57) DUNCRAIG ROAD
APPLECROSS
CITY OF MELVILLE

Job Number: DEVELOPWISE-DUNCRAIG
Drawing Number: DEVELOPWISE-DUNCRAIG-001
Revision: 0

Client: DEVELOPWISE

C/T: 2515/987
PLAN: DP 30893
Surveyed By: AP/SW
Surveyed Date: 17/07/2026
Vertical Datum: AHD
Horizontal Datum: PCG2020

Revision	Description	Drawn By	Checked	Approved	Date Drawn
0	Initial Issue	AP	CM	CM	21/07/2026

Document Set ID: 7893088
Version: 1, Version Date: 08/09/2026

Print Date: 11 September 2026, 10:58 am

This information is provided from TechnologyOne ECM

ADVERTISING COPY ONLY
These plans are for advertising of this development application only. These plans are subject to change and may not reflect the final issued as part of the final decision of the application. These plans are not to be reproduced, copied, shared or distributed without the consent of the applicant of this development application.

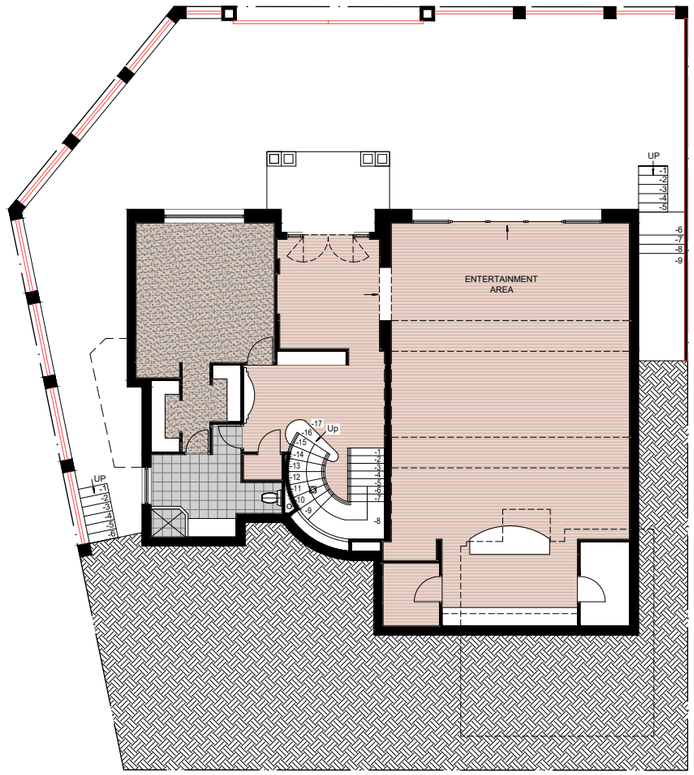

North

LOWER GROUND FLOOR PLAN EXISTING

SCALE 1:100

DEMO SHOWN IN RED

0 5m

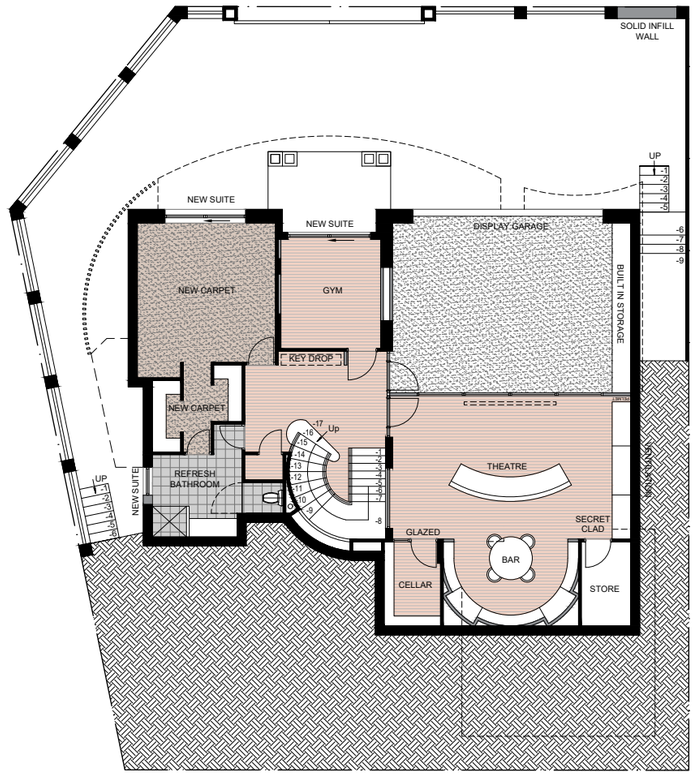

North

LOWER GROUND FLOOR PLAN PROPOSED

SCALE 1:100

NEW WALLS SHOWN IN GREY

0 5m

SCALE

1:100 @ A1, 1:200 @ A3

PROJECT TITLE

57 DUNCRAIG ROAD, APPLECROSS

DEVELOPMENT APPLICATION - 04/09/26

FLOOR PLANS

COPYRIGHT. The copyright of these drawings and all parts thereof remain the property of Proekt Architecture.

PROEKT

PROJECT # 2622

DRAWING # SK01

Document Set ID: 7[illegible]
Version: 1, Version Date: 06/09/2026

Print Date: 11 September 2026, 10:58 am

This information is provided from TechnologyOne ECM

ADVERTISING COPY ONLY
These plans are for advertising of this development application only. These plans are subject to change and may not reflect the final issued as part of the final decision of the application. These plans are not to be reproduced, copied, shared or distributed without the consent of the applicant of this development application.

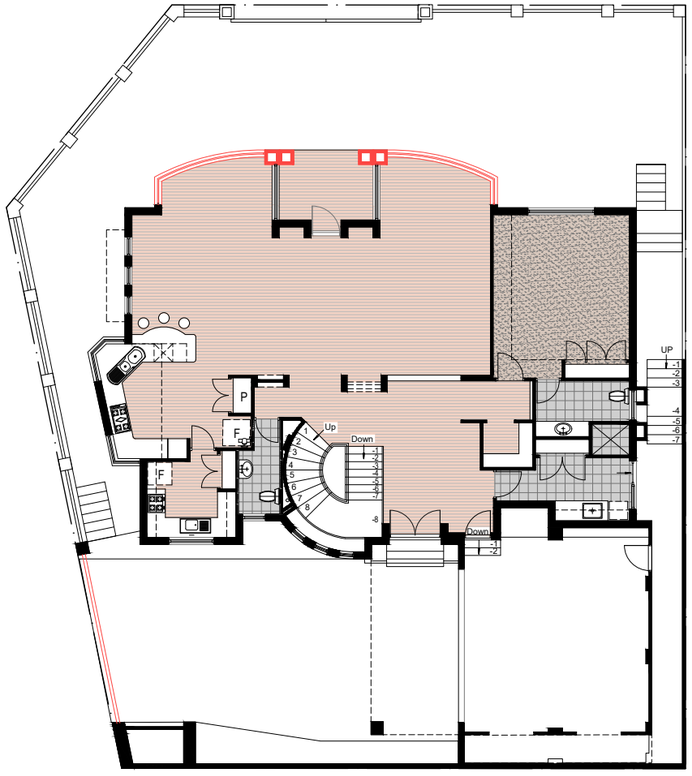

North

GROUND FLOOR PLAN EXISTING
SCALE 1:100
DEMO SHOWN IN RED

0 5m

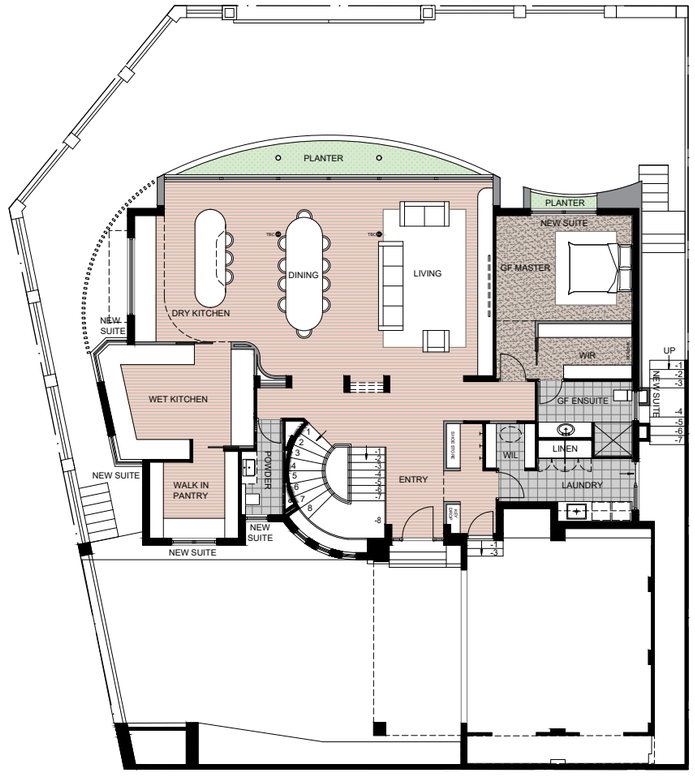

North

GROUND FLOOR PROPOSED
SCALE 1:100
NEW WALLS SHOWN IN GREY

0 5m

SCALE
1:100 @ A1, 1:200 @ A3

PROJECT TITLE
57 DUNCRAIG ROAD, APPLECROSS
DEVELOPMENT APPLICATION - 04/09/26
FLOOR PLANS

COPYRIGHT. The copyright of these drawings and all parts thereof remain the property of Proekt Architecture.

PROEKT

PROJECT #
2622

DRAWING #
SK02

Document Set ID: 7895098
Version: 1, Version Date: 08/09/2026

Print Date: 11 September 2026, 10:58 am

This information is provided from TechnologyOne ECM

ADVERTISING COPY ONLY
These plans are for advertising of this development application only. These plans are subject to change and may not reflect the final issued as part of the final decision of the application. These plans are not to be reproduced, copied, shared or distributed without the consent of the applicant of this development application.

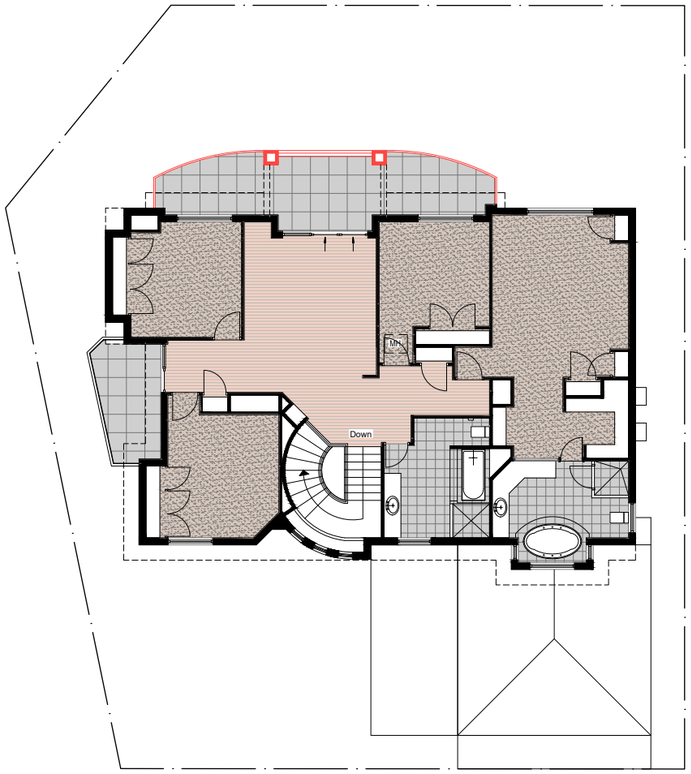

UPPER FLOOR PLAN EXISTING
SCALE 1:100
DEMO SHOWN IN RED
0 5m

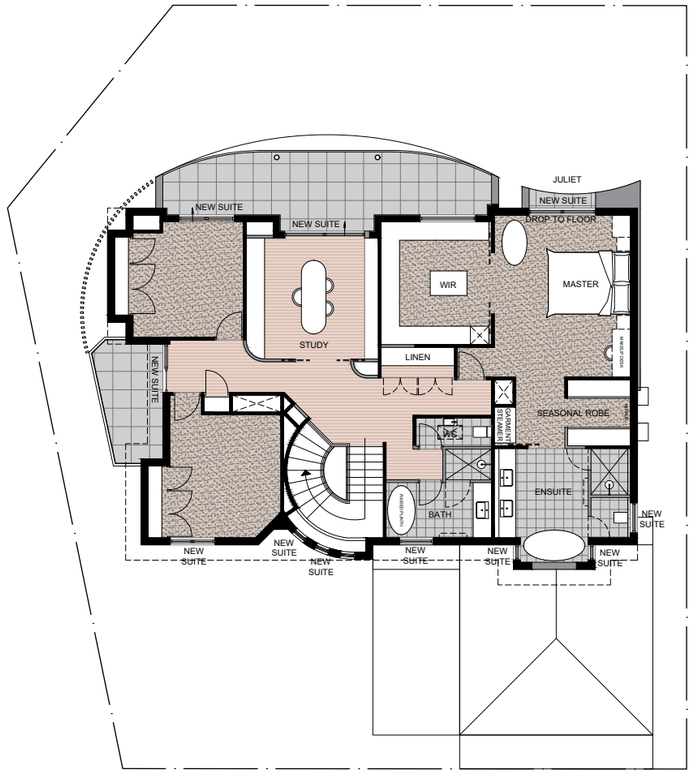

UPPER FLOOR PLAN PROPOSED
SCALE 1:100
NEW WALLS SHOWN IN GREY
0 5m

SCALE
1:100 @ A1, 1:200 @ A3

PROJECT TITLE
57 DUNCRAIG ROAD, APPLECROSS
DEVELOPMENT APPLICATION - 04/09/26
FLOOR PLANS

PROJECT #
2622
DRAWING #
SK03

COPYRIGHT. The copyright of these drawings and all parts thereof remain the property of Proekt Architecture.

Document Set ID: 7895798
Version: 1, Version Date: 09/09/2026

Print Date: 11 September 2026, 10:58 am

This information is provided from TechnologyOne ECM

ADVERTISING COPY ONLY
These plans are for advertising of this development application only. These plans are subject to change and may not reflect the final issued as part of the final decision of the application. These plans are not to be reproduced, copied, shared or distributed without the consent of the applicant of this development application.

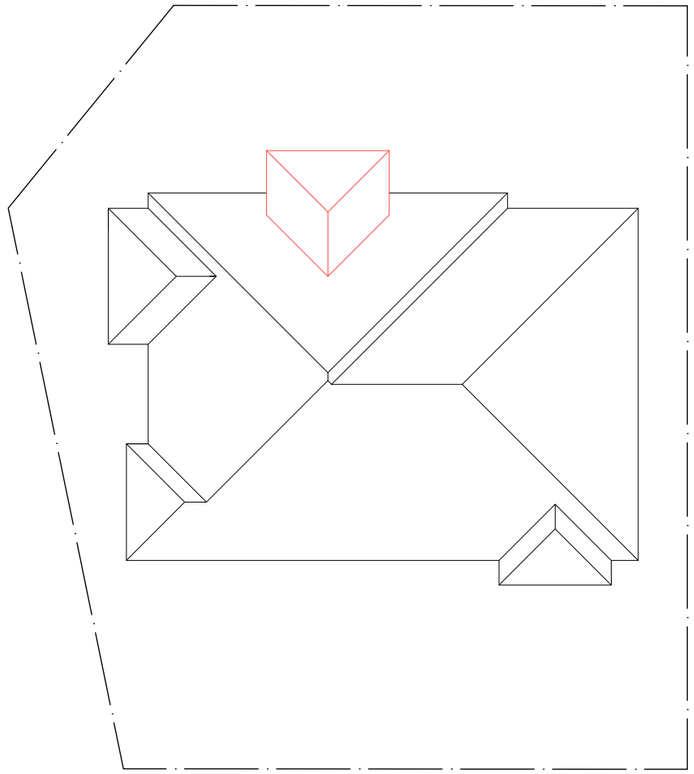

ROOF PLAN EXISTING
SCALE 1:100
DEMO SHOWN IN RED
0 5m

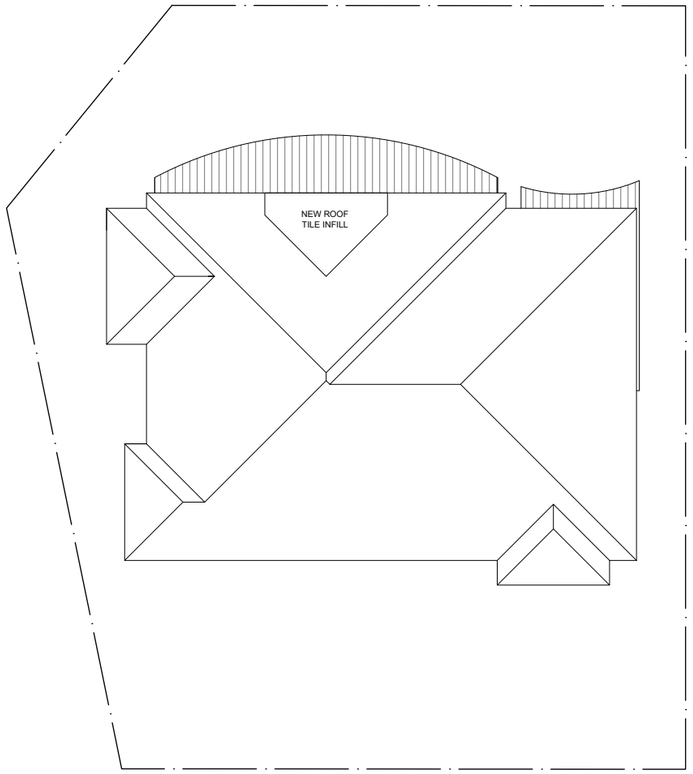

ROOF PLAN PROPOSED
SCALE 1:100
0 5m

SCALE
1:100 @ A1, 1:200 @ A3

PROJECT TITLE
57 DUNCRAIG ROAD, APPLECROSS
DEVELOPMENT APPLICATION - 04/09/26
ROOF PLAN

COPYRIGHT. The copyright of these drawings and all parts thereof remain the property of Proekt Architecture.

PROEKT

PROJECT #
2622
DRAWING #
SK04

Document Set ID: 7893098
Version: 1, Version Date: 09/09/2026

Print Date: 11 September 2026, 10:58 am

This information is provided from TechnologyOne ECM

ADVERTISING COPY ONLY
These plans are for advertising of this development application only. These plans are subject to change and may not reflect the final issued as part of the final decision of the application. These plans are not to be reproduced, copied, shared or distributed without the consent of the applicant of this development application.

BEFORE



NORTH ELEVATION EXISTING

1:100 @ A1, 1:200 @ A3

DEMO SHOWN IN RED

0 5 m

BEFORE



WEST ELEVATION EXISTING

1:100 @ A1, 1:200 @ A3

DEMO SHOWN IN RED

0 5 m

AFTER



NORTH ELEVATION PROPOSED

1:100 @ A1, 1:200 @ A3

0 5 m

AFTER



WEST ELEVATION PROPOSED

1:100 @ A1, 1:200 @ A3

0 5 m

SCALE
1:100 @ A1, 1:200 @ A3

PROJECT TITLE
57 DUNCRAIG ROAD, APPLECROSS
DEVELOPMENT APPLICATION - 04/09/26
ELEVATIONS

PROJECT #
2622

DRAWING #
SK05

PROEKT

COPYRIGHT. The copyright of these drawings and all parts thereof remain the property of Proekt Architecture.

Document Set ID: 7895096
Version: 1, Version Date: 09/09/2026

Print Date: 11 September 2026, 10:58 am

This information is provided from TechnologyOne ECM

ADVERTISING COPY ONLY
These plans are for advertising of this development application only. These plans are subject to change and may not reflect the final issued as part of the final decision of the application. These plans are not to be reproduced, copied, shared or distributed without the consent of the applicant of this development application.

BEFORE



SOUTH ELEVATION EXISTING

1:100 @ A1, 1:200 @ A3

DEMO SHOWN IN RED

0 5 m

BEFORE

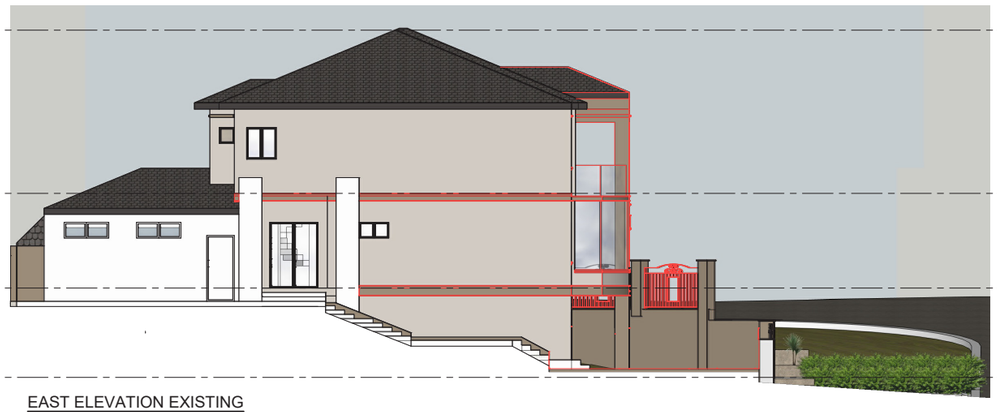

EAST ELEVATION EXISTING

1:100 @ A1, 1:200 @ A3

DEMO SHOWN IN RED

0 5 m

AFTER



SOUTH ELEVATION PROPOSED

1:100 @ A1, 1:200 @ A3

0 5 m

AFTER



EAST ELEVATION PROPOSED

1:100 @ A1, 1:200 @ A3

0 5 m

SCALE
1:100 @ A1, 1:200 @ A3

PROJECT TITLE
57 DUNCRAIG ROAD, APPLECROSS
DEVELOPMENT APPLICATION - 04/09/26
ELEVATIONS

COPYRIGHT. The copyright of these drawings and all parts thereof remain the property of Proekt Architecture.

PROEKT

PROJECT #
2622

DRAWING #
SK06

Document Set ID: 7695098
Version: 1, Version Date: 09/09/2026

Print Date: 11 September 2026, 10:58 am

This information is provided from TechnologyOne ECM





ADVERTISING COPY ONLY
These plans are for advertising of this development application only. These plans are subject to change and may not reflect the final issued as part of the final decision of the application. These plans are not to be reproduced, copied, shared or distributed without the consent of the applicant of this development application.

PROEKT ARCHITECTURE

Document Set ID: 7595098
Version: 1, Version Date: 08/09/2026

Print Date: 11 September 2026, 10:58 am

This information is provided from TechnologyOne ECM





ADVERTISING COPY ONLY
These plans are for advertising of this development application only. These plans are subject to change and may not reflect the final issued as part of the final decision of the application. These plans are not to be reproduced, copied, shared or distributed without the consent of the applicant of this development application.

Document Set ID: 7895098
Version: 1, Version Date: 09/09/2026

Print Date: 11 September 2026, 10:58 am